REVISIONS			
REV.	DESCRIPTION	DATE	APPROVED
01	RELEASE PER ECR 6000003026	08/13/2020	MB
02	SKIP REV SAP	10/13/2020	MB
03	CHANGE PER ECR 6000003300	11/17/2020	MB

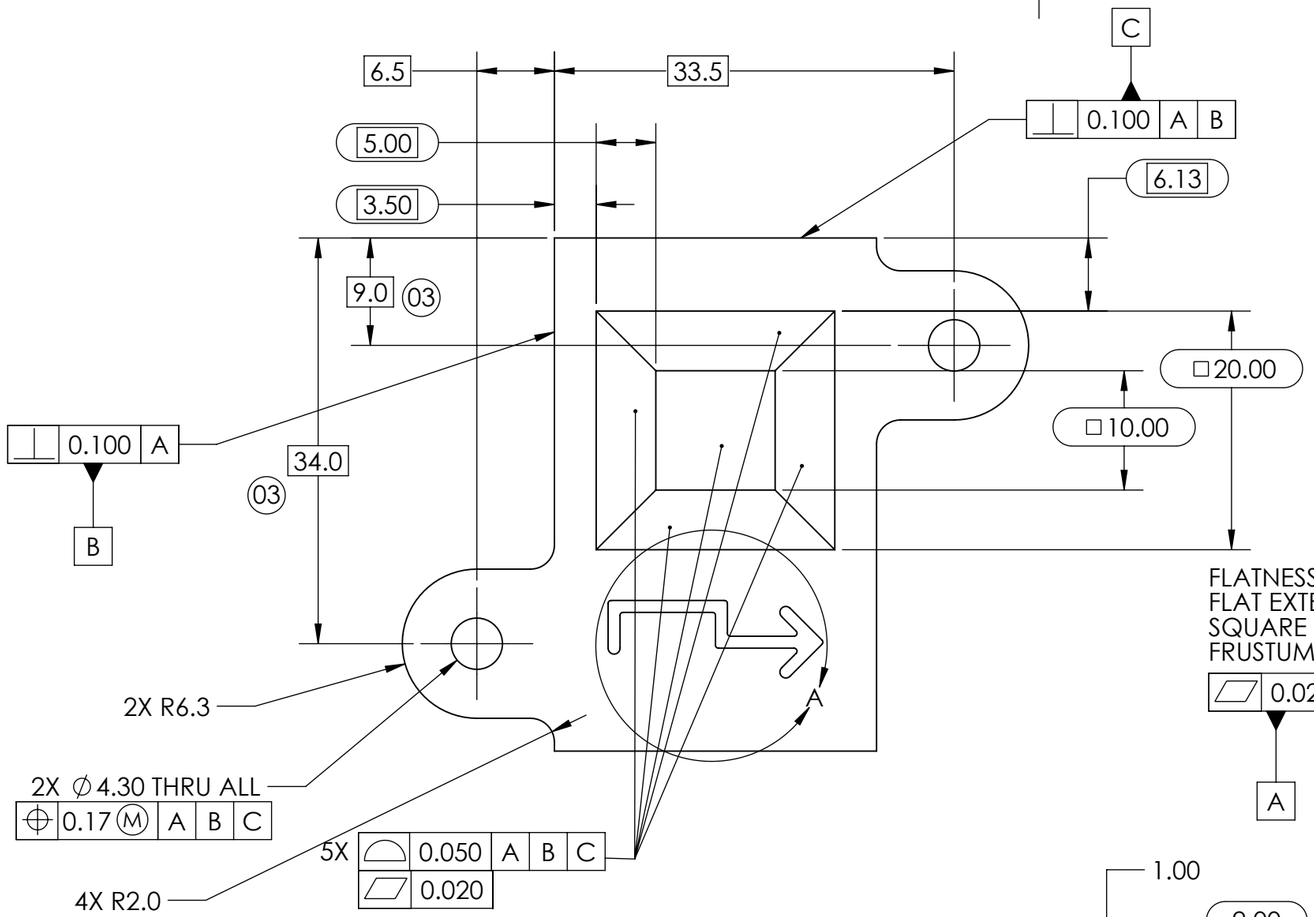

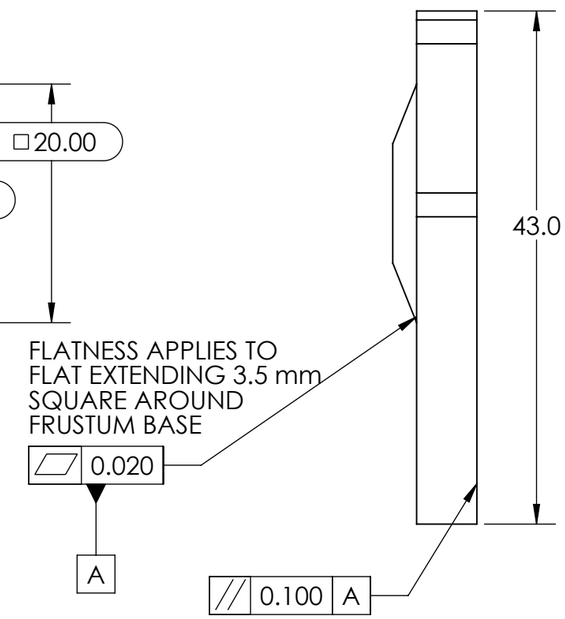

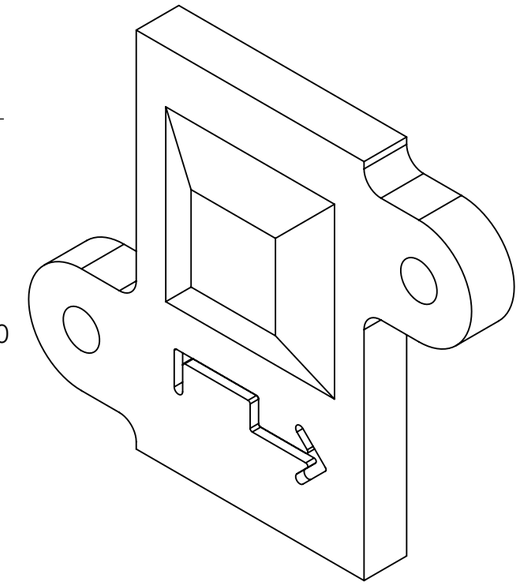

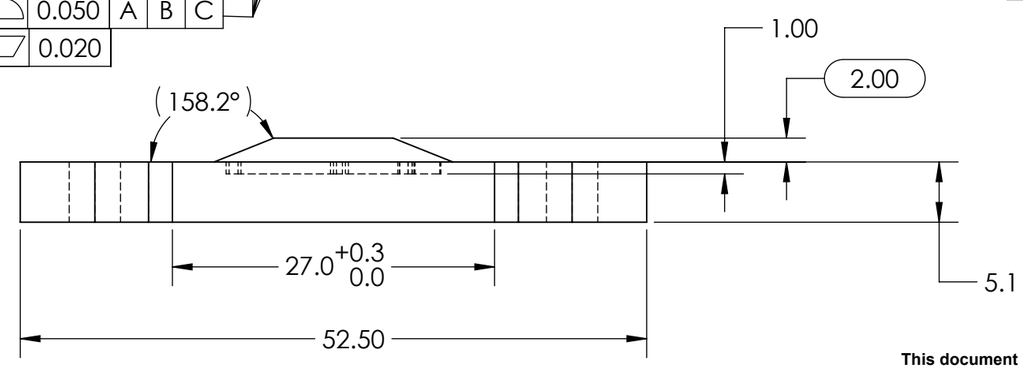

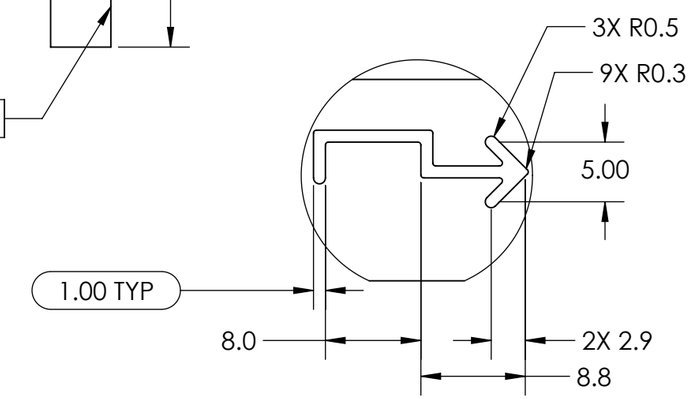

DETAIL A

NOTES:
1. UNLESS OTHERWISE SPECIFIED, THIS DRAWING TO BE USED IN CORRELATION WITH SUPPLIED 3D CAD DATA FILE WITH THE SAME NAME AND REVISION AS THIS DRAWING. ALL PART DIMENSIONS, DETAILS, AND FORM ARE TO BE DETERMINED DIRECTLY FROM THE SUPPLIED 3D CAD DATA FILE. HOWEVER, ALL DIMENSIONS AND TOLERANCES ON THIS DRAWING TAKE PRECEDENCE OVER SUPPLIED 3D CAD DATA FILE. THIS DRAWING PROVIDES ADDITIONAL INFORMATION FOR TOOL BUILD AND THE PRODUCTION AND CHECKING OF THIS PART.

2. ALL MATERIALS, PROCESSES AND FINISHES OF FINAL PRODUCT TO COMPLY WITH EU RoHS DIRECTIVE. EACH HOMOGENOUS MATERIAL NOT TO EXCEED THE MAXIMUM CONCENTRATION VALUE (MCV) FOR RoHS RESTRICTED MATERIALS:
VENDOR TO PROVIDE CERTICATE OF COMPLIANCE FOR ALL MATERIALS, PROCESSES AND FINISHES OF FINAL PRODUCT.

3. REMOVE ALL BURRS AND SHARP EDGES.

4. PART TO BE CLEAN AND DRY.

5. ALL DIMENSIONS ARE AFTER FINISH

6. FINISH: EVEN, MATTE FINISH REQUIRED ON ALL SURFACES MEASURE 85 DEGREE GLOSS. NOMINAL 2GU. ACCEPTABLE RANGE 1- 6 GU MEASURE PER PROCEDURE P19-10034
BLAST WITH ALUMINUM OXIDE, FOLLOWED BY CLEAR ANODIZE TYPE II

7. INSPECT ALL SURFACES TO COGNEX STANDARD S907

8. EACH PART SHOULD BE PACKAGED INTO ITS OWN SEALABLE BUBBLE BAG AND LABELED WITH PART NUMBER AND REVISION.

This document is proprietary to Cognex Corp., Natick, MA. and may not to be used in any way, disclosed to others, or reproduced, in whole or in part, except as expressly authorized by Cognex in writing. Any permitted reproduction of this document must include this notice. ©2017 Cognex Corp. All rights reserved.

Material: AL 6061-T6
Volume: 7610 mm³
Weight: 20.5 g

General Tolerances	
x.x	± 0.25
x.xx	± 0.13

COGNEX

Title: Single Frustum, 10 mm Top Side
In-Sight 3D-L4000
(02)

Drawn:	Size	Date	Dwg No.	Rev
M. BANKS	B	8/13/2020	371-20104	03
Approved:	Scale 2:1	Unit mm		SHEET 1 OF 1