| REVISIONS | | | |
|---|---|---|---|
| REV. | DESCRIPTION | DATE | APPROVED |
| 1 | INITIAL BETA RELEASE, UPDATE NOTES, ECO 15-000901 | 10/20/2015 | D.PARRETT |
| A | PART ACCEPTANCE, ECO 15-001065 | 12/10/2015 | D.PARRETT |
| B | RELEASE PER ECO 16-000446 | 5/18/2016 | D.PARRETT |
| B2 | RELEASE PER ECO 16-000488 | 6/2/2016 | D.PARRETT |
| B3 | EDITED NOTE 7 PER ECO 16-000611 | 7/1/2016 | K.ANGELOSANTO |

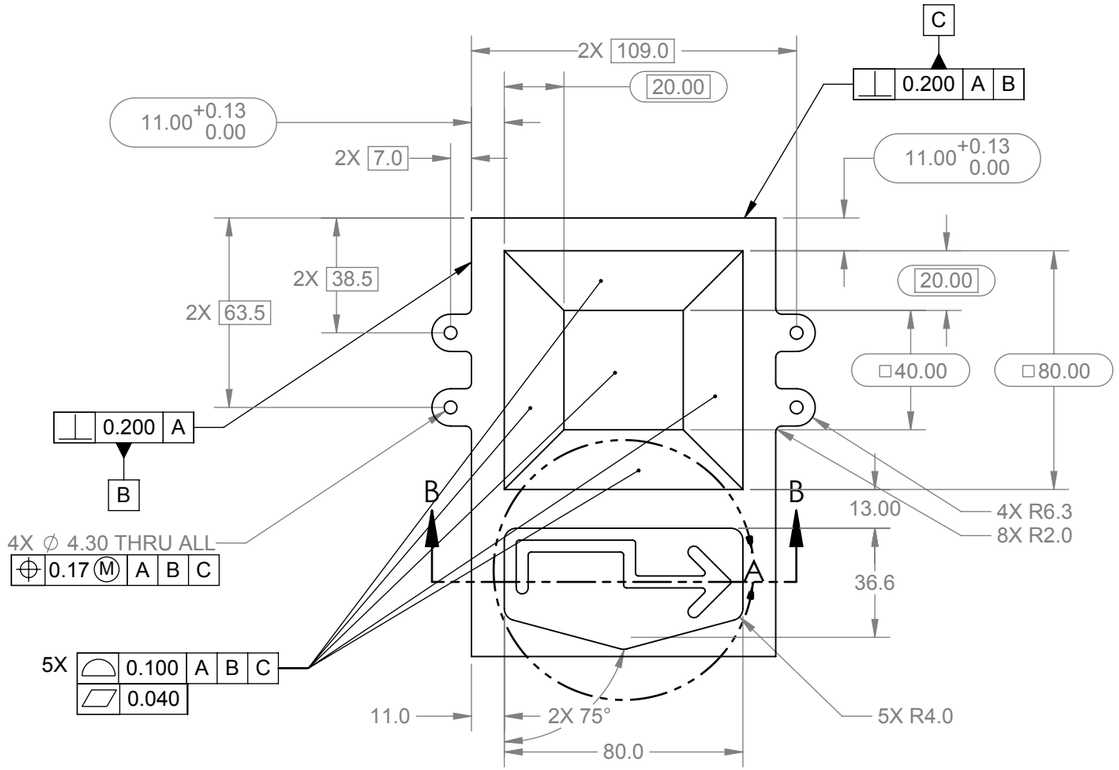


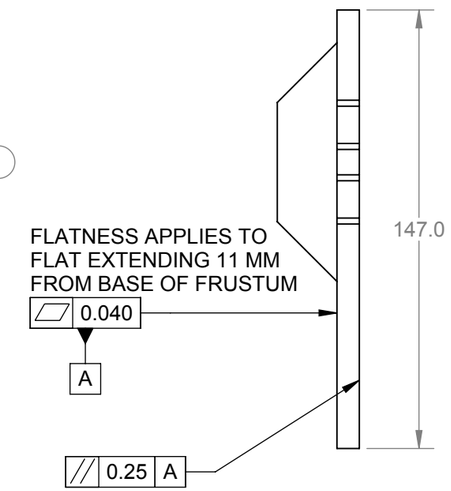


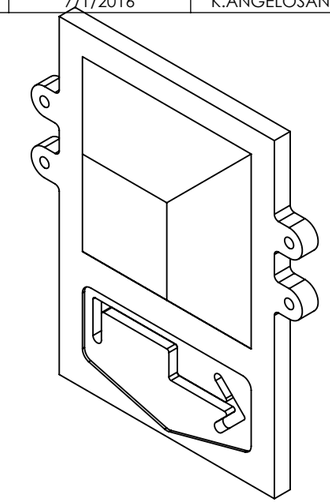

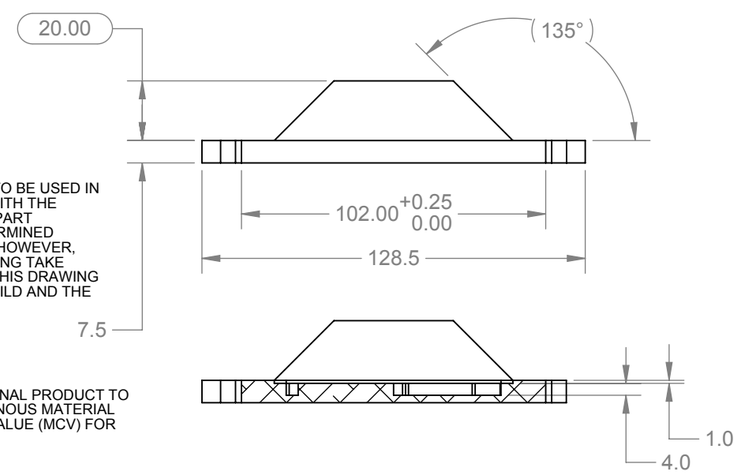


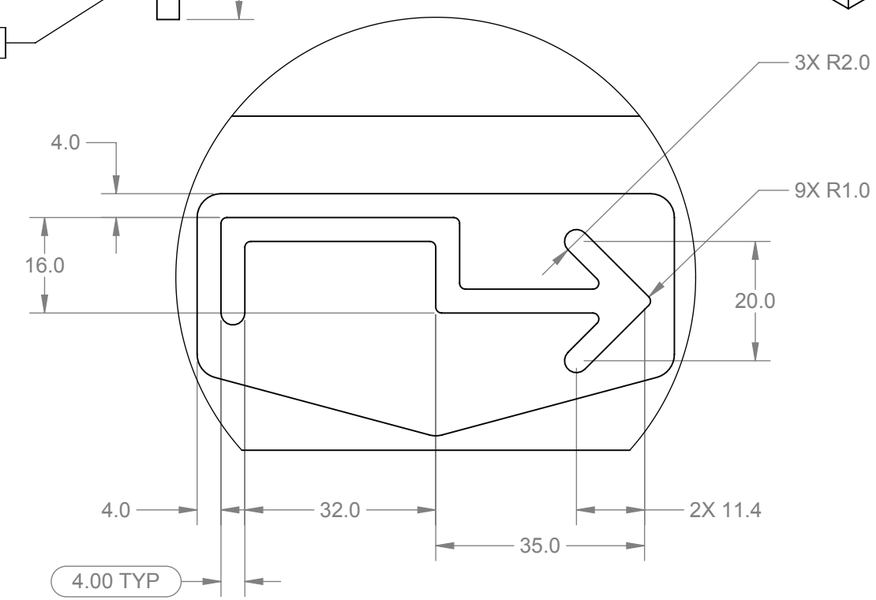


NOTES:
1. UNLESS OTHERWISE SPECIFIED. THIS DRAWING TO BE USED IN CORRELATION WITH SUPPLIED 3D CAD DATA FILE WITH THE SAME NAME AND REVISION AS THIS DRAWING. ALL PART DIMENSIONS, DETAILS, AND FORM ARE TO BE DETERMINED DIRECTLY FROM THE SUPPLIED 3D CAD DATA FILE. HOWEVER, ALL DIMENSIONS AND TOLERANCES ON THIS DRAWING TAKE PRECEDENCE OVER SUPPLIED 3D CAD DATA FILE. THIS DRAWING PROVIDES ADDITIONAL INFORMATION FOR TOOL BUILD AND THE PRODUCTION AND CHECKING OF THIS PART.

2. REMOVE ALL BURRS AND SHARP EDGES.

3. PART TO BE CLEAN AND DRY.

4. ALL MATERIALS, PROCESSES AND FINISHES OF FINAL PRODUCT TO COMPLY WITH EU RoHS DIRECTIVE. EACH HOMOGENOUS MATERIAL NOT TO EXCEED THE MAXIMUM CONCENTRATION VALUE (MCV) FOR RoHS RESTRICTED MATERIALS:
SUBSTANCE RoHS LIMIT: MCV
A. LEAD (Pb) < 0.10% = < 1,000PPM
B. MERCURY (Hg) < 0.10% = < 1,000PPM
C. HEXAVALENT CHROMIUM (Cr VI) < 0.10% = < 1,000PPM
D. CADMIUM (Cd) < 0.01% = < 100PPM
E. POLYBROMINATED BIPHENYL (PBB) < 0.10% = < 1,000PPM
F. POLYBROMATED DIPHENYL ETHER (PBDE) < 0.10% = < 1,000PPM
VENDOR TO PROVIDE CERTICATE OF COMPLIANCE FOR ALL MATERIALS, PROCESSES AND FINISHES OF FINAL PRODUCT.

5. ALL DIMENSIONS ARE AFTER FINISH

6. FINISH: EVEN, MATTE FINISH REQUIRED ON ALL SURFACES
MEASURE 85 DEGREE GLOSS. NOMINAL 2GU. ACCEPTABLE RANGE 1- 6 GU
MEASURE PER PROCEDURE P19-10034
BLAST WITH ALUMINUM OXIDE, FOLLOWED BY CLEAR ANODIZE TYPE II

7. EACH PART SHOULD BE PACKAGED INTO ITS OWN SEALABLE BUBBLE BAG AND LABELED WITH PART NUMBER AND REVISION.


**PROPRIETARY AND CONFIDENTIAL**

© 2013 COGNEX CORP. ALL RIGHTS RESERVED. THIS DOCUMENT IS PROPRIETARY TO COGNEX CORP., NATICK, MA AND MAY NOT BE USED IN ANYWAY, DISCLOSED TO OTHERS, OR REPRODUCED, IN WHOLE OR IN PART, EXCEPT AS EXPRESSLY AUTHORIZED BY COGNEX IN WRITING. ANY PERMITTED REPRODUCTION OF THIS DOCUMENT MUST INCLUDE THIS NOTICE.


**DIMENSIONS**
UNLESS OTHERWISE SPECIFIED, DIMENSIONS ARE IN **MILLIMETERS[INCHES]**.

**TOLERANCES**

X.X[X.XX]: ± 0.25[.010]
X.XX[X.XXX]: ± 0.13[.005]
ANGULAR: ± .5°

GEOMETRIC TOLERANCES PER ASME Y14.5M-1994

| | NAME | DATE |
|---|---|---|
| DRAWN | D.PARRETT | 07/14/15 |
| CHECKED | - | - |
| MFG APPR. | - | - |

MATERIAL: AL 6061-T6

FINISH: SEE NOTES

COGNEX — NATICK, MA 01760

TITLE: **Single Frustum, 40mm Top Side**

DWG. NO. **371-10054R** REV **B3**

SIZE **B** SCALE: 1:1 SHEET 1 OF 1