LA16 Series

Micro Linear Servo Actuator

Model Instruction

Series	Speed Level	Mechanical Interface	Electronic Interface	Model code
LA16 —	02 —	1 —	D	LA16-021D

Stroke

Speed Level	Mechanical Interface	Electronic Interface
02	1-Standard Interface	D-LVTTL Serial port
03	2-Ear Interface	P-PWM Serial port
07	3-Octagonal Interface	
09		

Standard Parameters

Stroke	Weight	Operating Voltage	Repeatability	Operating Temperature Range	Quiescent Current	Peak Current	IP level
16mm	23g	DC8V±10%	±0.03mm	-10℃~+60℃	0.02A	2A	IP40

Speed Levels and Associated Parameters

Speed Level	Maximum Force	Locked-Rotor Force	Maximum Self-Locking Force	No-load Speed	Full Load Speed	No-Load Current
02	70N	100N	100N	18mm/s	8mm/s	0.2A
03	56N	80N	100N	36mm/s	16mm/s	0.24A
07	42N	60N	50N	50mm/s	21mm/s	0.5A
09	21N	30N	38N	70mm/s	36mm/s	0.5A

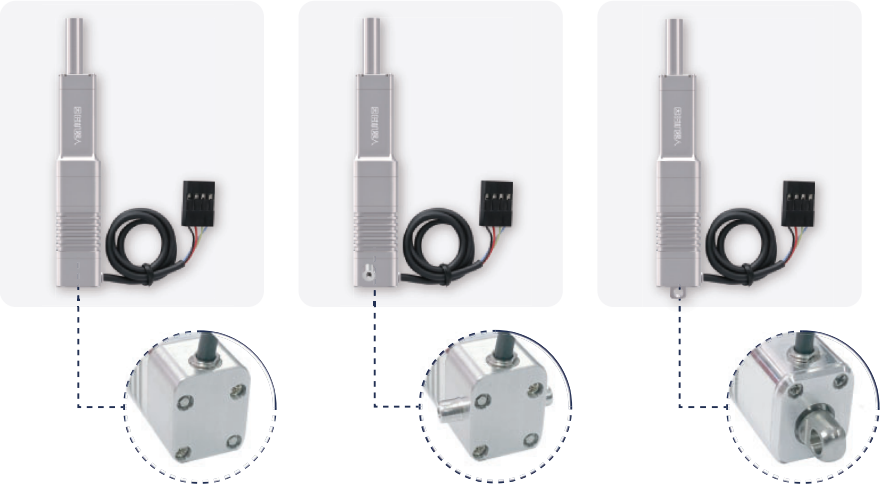

Standard Interface　　Ear Interface　　Octagonal Interface

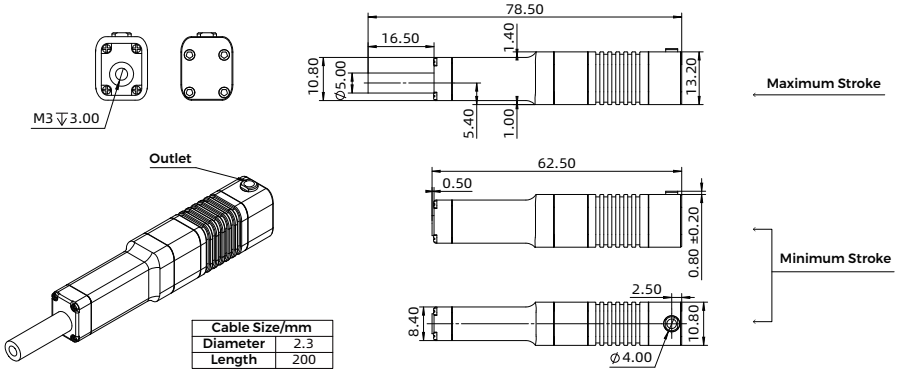

Standard Interface

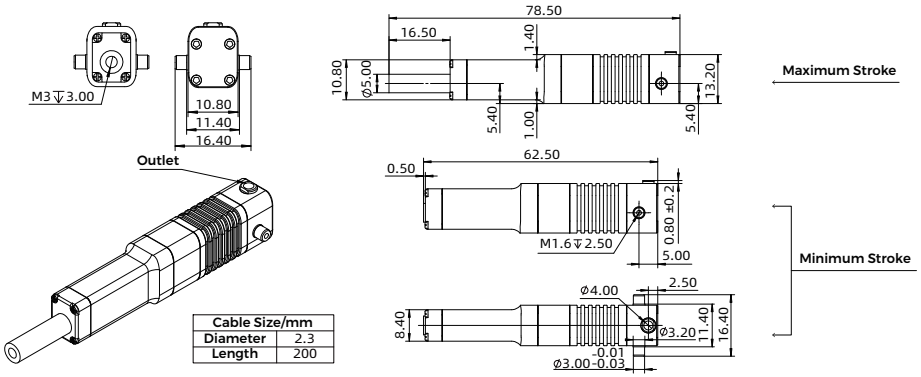

Ear Interface

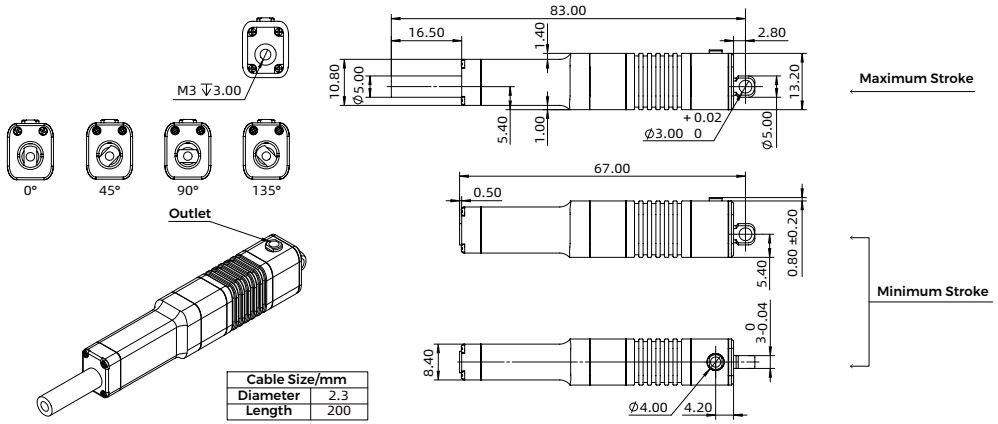

Octagonal Interface