LAS10 Series

Micro Linear Servo Actuator

Model Instruction

Series	Speed Level	Mechanical Interface	Electronic Interface	Model code
LAS10 —	02 —	1 —	D	LAS10-021D

Stroke: 02, 03, 06, 08, 10

Mechanical Interface: 1-Standard Interface; 3-Octagonal Interface

Electronic Interface: D-LVTTL Serial port; P-PWM Serial port

Standard Parameters

Stroke	Weight	Operating Voltage	Repeatability	Operating Temperature Range	Quiescent Current	Peak Current	IP level
10mm	24g	DC8V±10%	±0.02mm	-10℃~+60℃	0.02A	2A	IP40

Speed Levels and Associated Parameters

Speed Level	Maximum Force	Locked-Rotor Force	Maximum Self-Locking Force	No-load Speed	Full Load Speed	No-Load Current
02	105N	150N	150N	13mm/s	4mm/s	0.2A
03	56N	80N	150N	26mm/s	12mm/s	0.24A
06	49N	70N	50N	38mm/s	18mm/s	0.5A
08	35N	50N	38N	53mm/s	27mm/s	0.5A
10	31.5N	45N	30N	62mm/s	39mm/s	0.5A

Standard Interface

Octagonal Interface

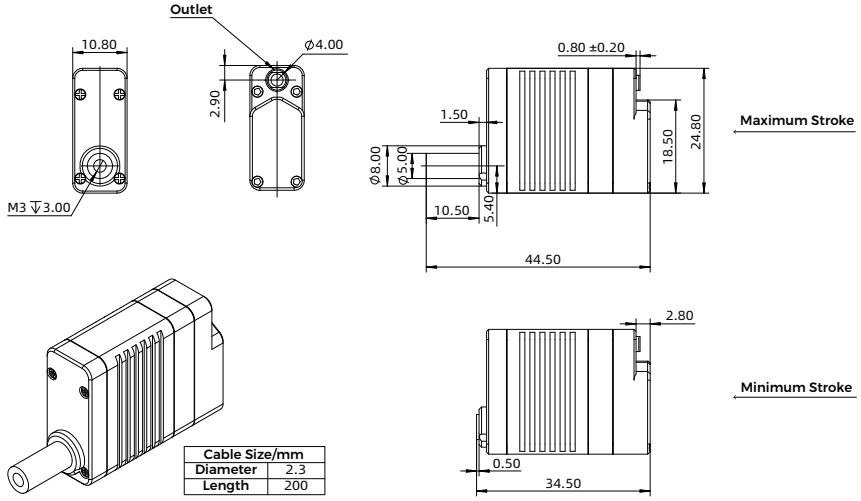

Standard Interface

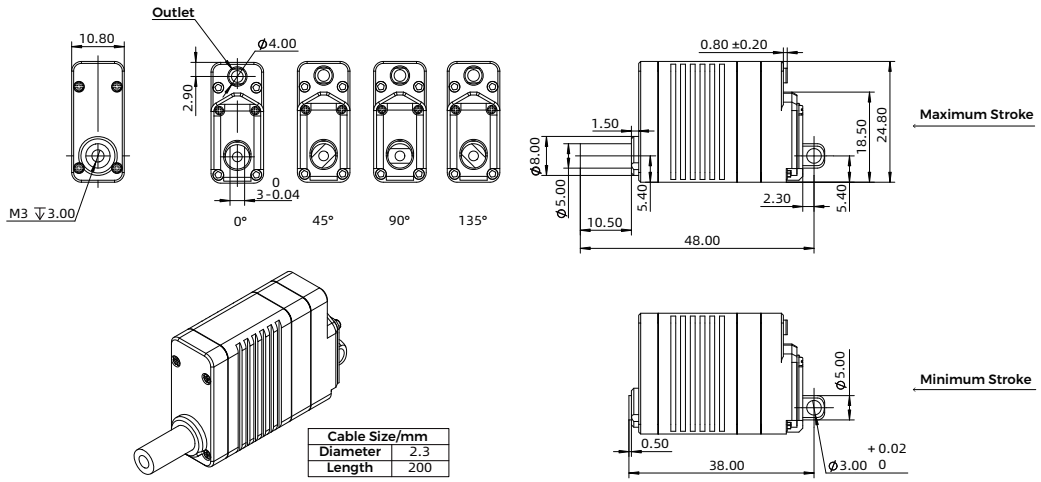

Octagonal Interface